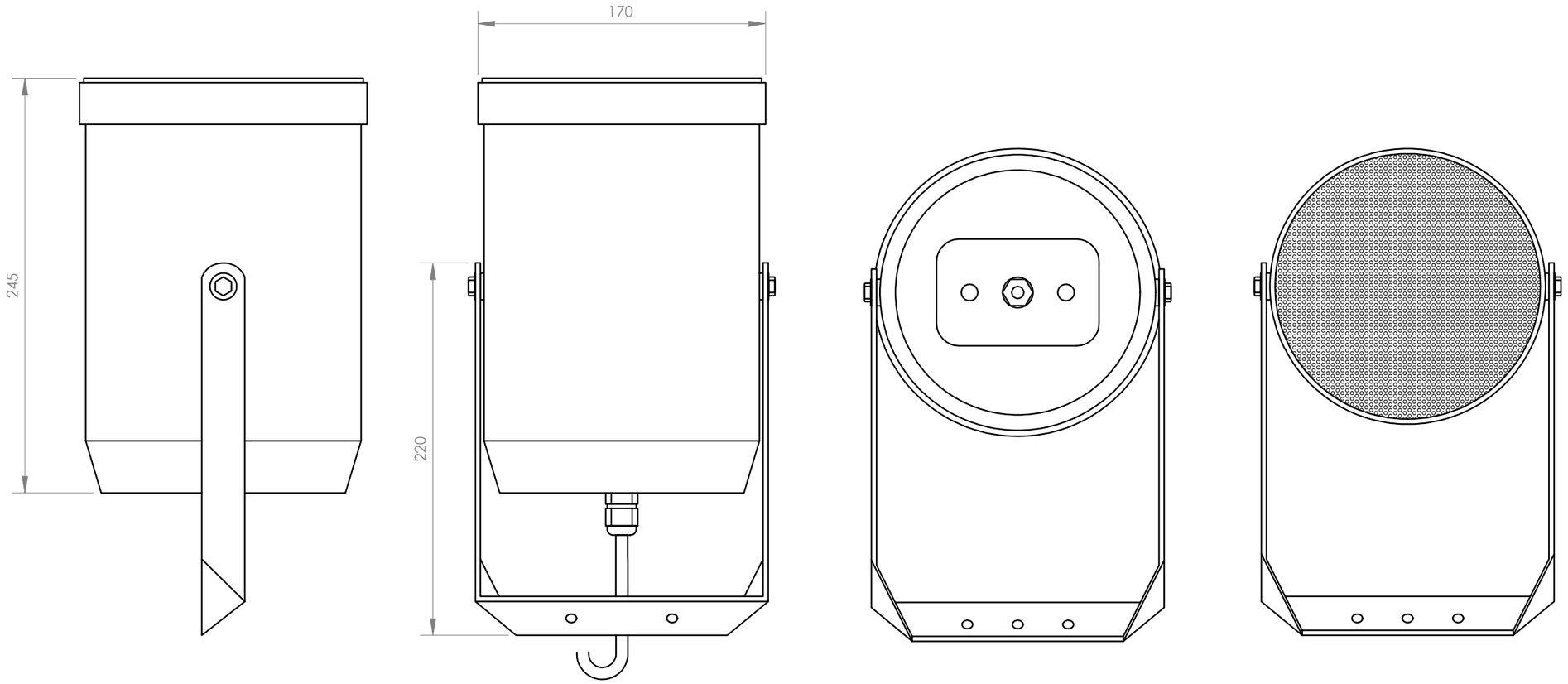

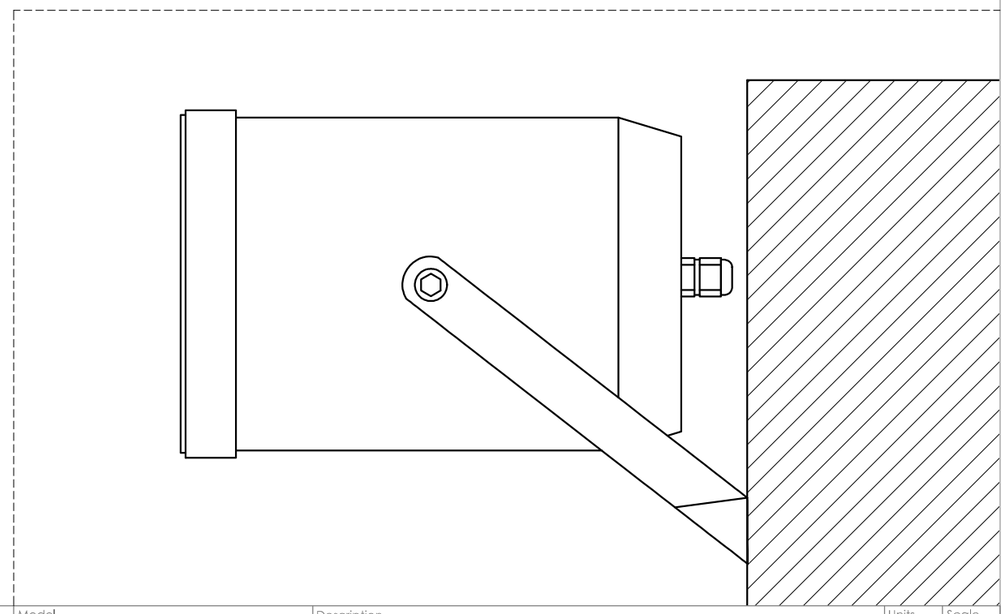

	Model	Description	Units	Scale
FONESTAR	PF-26T	UNIDIRECTIONAL SOUND PROJECTOR	mm	1:3